Nikon lens incorporated in compact camera

"Pikaichi" L35AF 35mm f/2.8

Tonight, I would like to discuss a lens for different tastes that was not given the prefix "NIKKOR." It was a "Nikon lens" rather than "NIKKOR" that was mounted in Nikon's first AF point-and-shoot (lens shutter: also known as compact) camera. How different is the lens mounted in L35AF from NIKKOR? What imaging characteristics the lens offers? Who designed the lens? Let's look at the progress of development of the lens for Pikaichi and the staff members involved in the development of the lens.

by Haruo Sato

I. AF compact cameras and NIKKOR

In 1977, AF compact cameras experienced a surge of unprecedented popularity. Existing compact cameras were based on visual measurement or coincidence type of focusing. This type of focusing was, however, difficult enough for amateur camera users to handle, and those who could take pictures in sharp focus or at correct exposure were considered experts at taking photographs in those days. Under these circumstances, the compact camera suddenly emerged featuring freedom from the focusing technique. The camera was named Juspin Konica and it brought a new style into the camera industry.

At that time, single-lens reflex (SLR) systems were long the Nikon cameras' stronghold. However, the trend of this new style was very strong and it involved and energized the entire industry. Similar cameras were released successively from individual competitors. Eventually the new trend motivated Nikon to develop compact cameras.

Staff members for the development were selected from the SLR Design Division and they concentrated on the design of compact cameras. Six years after the boom of compact camera was set off, the consumer market was a full of AF compact cameras. In 1983, after a thorough preparation, Nikon introduced the AF compact

camera, L35AF, named "Pikaichi" (meaning "top notch" in Japanese). The trade name of Pikaichi was chosen to represent the wishes that the camera would take the best pictures and sell the most in the industry.

However, the lens on this camera was not given the prefix "NIKKOR." This reportedly spread rumors in those days that the lens was not manufactured by Nikon but it had been designed by another competitor. This type of rumor can unexpectedly hurt those who are involved with development. The developers of the lens must have felt frustrated when they heard the rumors.

II. Development history of Nikon lens 35mm f/2.8

Now, let's see the history of the development of the Nikon lens 35mm f/2.8 for "Pikaichi", L35AF. The design of the optical system was completed in December 1981. Then, the mass production drawings were issued the next August.

As explained above, the lens for Pikaichi was genuinely designed by Nikon. In addition, the lens design was based on the same philosophy as in the development of NIKKOR lenses. The designer of the optical system was Mr. Koichi Wakamiya assigned to the Optical Section 1, Optical System Department. Mr. Wakamiya was first engaged in the design of optical systems for customized instruments and equipment and then became a camera lens designer.

Mr. Wakamiya demonstrated his superior design skills with the 35mm f/2.8 for L35AF, and he was preferred as the designer of optical systems for the subsequent "Pikaichi" series. His other signature design works include the 100mm f/2.8 for E series and UV Nikkor 105mm f/4.5S. Mr. Wakamiya is very gentle and quiet in his personality. He has been diligent and steady when carrying out his assignments, and his design data is so beautiful and considered as "Pikaichi",. Currently, Mr. Wakamiya is devoted to designing optical systems, looking to the future. He would like to create lenses remembered forever. To tell the truth, Mr. Wakamiya was once a master of Mr. Kouichi Ohshita, the colleague author of this "NIKKOR-The Thousand and One Nights". Mr. Ohshita learned the know-how on optical system design by Mr. Wakamiya and took over his superior's job responsibilities, involved in the design of optical systems for compact cameras for a while.

III. Imaging characteristics and lens performance

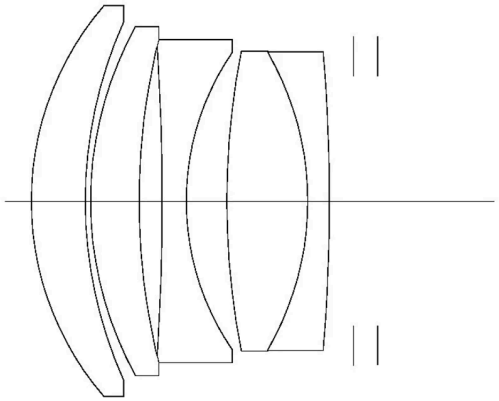

Cross section of the lens

Take a look at the cross-sectional view. Please allow me to continue with a bit of technical explanation.

From the look at the cross-sectional view you may doubt that the lens system is different from the Tessar-type. If so, you are acute enough, since the compact cameras in those days were mostly based on the Tessar-type lens configuration. However, Mr. Wakamiya took a different option. This lens was designed with a Sonnar-Type lens configuration that Nippon Kogaku K.K. used for a long time. Selection of the Sonnar-Type helped reduce the size of the optical system and increase the lens diameter. In addition, compared to the predominant focal length of 38mm in the competitors' compact cameras, Mr. Wakamiya realized a genuine wide-angle 35mm lens. At full-open aperture, light intensity at periphery was slightly low, though Nikon's first compact camera model was equipped with full-fledged fast lens offering the maximum aperture of f/2.8, light intensity at periphery was slightly low, though Nikon's first compact camera model was equipped with full-fledged fast lens offering the maximum aperture of f/2.8.

Here, let's examine the imaging characteristics of this lens based on the design values and sample photos.

First, let's analyze the design data. The distinctive characteristic is the fact that Mr. Wakamiya selected the Sonnar-Type lens configuration to ensure the highest possible sharpness while increasing the apparent depth of field to the allowable

maximum extent. I'm sure that his selection best fit the lens for compact camera. The lens offers superior compensation for both spherical aberration and coma, giving less astigmatism though involving some curvature of field.

Consequently, well-balanced resolution and contrast are achieved and thus, images of clear quality are expected. In addition, despite the adoption of Sonnar-Type lens and resultant compact size of optical system, the positive distortion (pincushion) is suppressed to a relatively reasonable degree of approx. 2%. Furthermore, we are deeply impressed with the lens design by Mr. Wakamiya in that the shorter focal length of 35mm is achieved by the Sonnar-Type which is unfit for wide angle lenses by nature, and also that the close-range aberration fluctuation, one of the drawbacks of the Sonnar-Type, is very precisely corrected. These design innovations show evidence that the Nikkor spirits to make straight-out effort even for the lens mounted on the consumer-oriented compact camera.



Sample 1
Nikon L35AF
Nikon 35mm f/2.8 Auto, Auto, PKR
©2006/2007 SATO, Haruo



Sample 2
Nikon L35AF
Nikon 35mm f/2.8 Auto, Auto, PKR
©2006/2007 Kouichi Ohshita

Next, let's check the photographic characteristics with sample pictures. The subjects I selected for sample photos would be typical shot with this camera in normal use. Sample 1 shows a long-shot photo. Sample 2 shows a shot typical for family portrait and taken at a medium distance. In Sample 1, look at Mt. Fuji and the foreground forest, and you should be able to see that the lens renders adequate resolution and contrast. In Sample 2, pay attention to the grain of the wood playground equipment and the texture of hair and skin, and you can see that very clear and high contrast is achieved. The sample photos were both taken in slight cloudy or fine weather. The photos were shot using ISO64 film with automatic exposure, and the aperture could be narrowed down to f/5.6 to 8.

Profile of Koichi Wakamiya

Mr. Wakamiya is elegant, refined and normally good-tempered. One of his cousins is a onetime prime minister who everyone knows. This family background may lead to the elegance of Mr. Wakamiya.

The story which I heard from a senior colleague describes his personality a little. One day, Mr. Wakamiya said at length, "I like the dinner without using any knives and forks," while his colleagues were eating and drinking cheerfully and

boisterously in a tavern with Mr. Wakamiya. Hearing the story, I had thought a celebrity would refer to a person like Mr. Wakamiya.

Mr. Wakamiya is interested in artistic handicrafts and products, as they remind him of the presence of a craftsperson and artist in those days. His collection includes cameras and lenses and also the brass microscopes manufactured in the 19th to 20th centuries and its relevant data. For cameras, he seems to be fond of miniature cameras in particular, and he reportedly hailed his son's birth by giving him a mini-camera instead of a toy. Ordinary people would want to talk about what they possess when they are collecting cameras.

However, Mr. Wakamiya would never tell us the full story of his collection. I once tried jointly with Mr. Ohshita to find out what cameras Mr. Wakamiya had collected and we identified four to five cameras by implication, though our superior has been keeping his lips shut tight. The full facts about Mr. Wakamiya's collection still remain unknown.

Well, I'll give you an old story about when Mr. Ohshita and I held a round-table talk with Mr. Wakamiya about cameras in our younger days. I said, "The rangefinder on the X becomes imprecise after a prolonged period of use. Repair costs a lot of money …" Mr. Ohshita responded to my complaint by saying, "You should be able to repair and adjust it by yourself." Then Mr. Wakamiya added, "Mr. Sato, do not use it because it goes out of order when you use it." Mr. Ohshita and I looked at each other stunned. Mr. Wakamiya was quite different from us, and he considered the camera as a collector's item rather than something to be used.

Nikon Imaging, NIKKOR – The Thousand and One Nights No. 33, by Haruo Sato. Original: https://imaging.nikon.com/history/story/0033/index.htm